Problems for chapter 3, part 1/2

Last modified: 2026-11-26

3.1
This chapter is much too serious. Have your AI agent explain how to derive equation 3/15 from equation 3/10 in the style of a Shakespearean monologue by a grave, profound but charming character in a play. The actor delivering the speech is a beginner who mixes up words, but it's okay because the meaning still gets across.

3.2
A lake has the dimensions shown below. What is the pressure at the point marked with a cross?

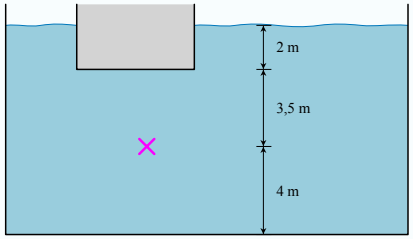

- Approximately 1.2 bar
- Approximately 1.35 bar
- Approximately 1.4 bar
- Approximately 1.95 bar
- Approximately 1.15 bar
- Approximately 1.02 bar
- Approximately 1.035 bar
- Approximately 1.055 bar
- Approximately 1.04 bar
- Approximately 1.095 bar
- Approximately 1.55 bar
- Approximately 1.015 bar
- Approximately 1.6 bar
- Approximately 1.06 bar

3.3
You have run a computational fluid dynamics (*CFD*) simulation of a cylindrical chemical reactor tank. You want to export the pressure at one instant and save it in a file. You will need a table with:

- Five columns: one for x, one for y, one for z, one for pressure, and one for its direction.
- Three columns: one for the x-component of pressure, one for the y-component, and one for the z-component.
- Four columns: one for x, one for y, one for z, and one for pressure.
- Six columns: one for x, one for y, one for z, one for the x-component of pressure, one for the y-component, and one for the z-component.
- One cell: there is only one value for pressure for the entire tank at any given moment.

3.4
From the same simulation, you now want to export the pressure gradient at one instant and save it in a file. You will need a table with:

- Five columns: one for x, one for y, one for z, one for the pressure gradient, and one for its direction.
- Three cells: one for the x-component of the pressure gradient, one for the y-component, and one for the z-component.
- Four columns: one for x, one for y, one for z, and one for the pressure gradient.
- Six columns: one for x, one for y, one for z, one for the x-component of the pressure gradient, one for the y-component, and one for the z-component.
- One cell: there is only one value for the pressure gradient for the entire tank at any given moment.

3.5
Which of the following statements about the pressure gradient are true? Select all that apply.

- It has six dimensions: one for each side of the cube
- It has units of force per unit volume
- It has three dimensions: it is a vector field
- It has four dimensions: one in x, one in y, one in z, plus one for pressure
- It points towards areas of low pressure
- It points towards areas of high pressure
- The nabla symbol (∇) in it can be used to impress your friends
- None of the other answers
- It has units of pressure per unit length

CC-BY-NC-SA Olivier Cleynen / Beyond Bernoulli Ventures, learnfluidmechanics.com

3.6
A tower is 100 meters high. The atmospheric pressure at its base is exactly 1 bar, and there is no wind. Which of the following best represents the air pressure at the top of the tower?

- Approximately 2 bar
- Approximately 1.1 bar
- Approximately 1.01 bar
- Approximately 1.001 bar
- Approximately 1.0001 bar
- Approximately 0.9999 bar
- Approximately 0.999 bar
- Approximately 0.99 bar
- Approximately 0.9 bar
- Approximately 0 bar

3.7
A small container is filled with water, as shown in figure 3.1. What is the pressure at the bottom of the container?

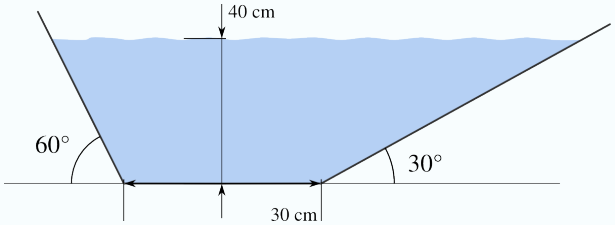

Figure 3.1: A small water container.
Figure CC-0 OC

3.8
A water-filled U-tube is connected to a pressurized air vessel, as shown in figure 3.2.

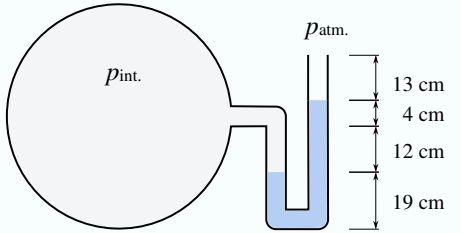

Figure 3.2: Working principle of a simple liquid tube manometer. The outlet is at atmospheric pressure $p_{atm.}$.
Figure CC-0 OC

3.8.1 What is the pressure $p_{int.}$ in the vessel?
3.8.2 What would the difference in liquid levels be at the same vessel pressure if mercury ($\rho_{mercury} = 13\,600\ \mathrm{kg\,m^{-3}}$) were used instead of water?

3.9
A water tank has a window on one of its straight walls, as shown in figure 3.3. The window is 3 m high, 4 m wide, and is positioned 0,4 m above the bottom of the tank.

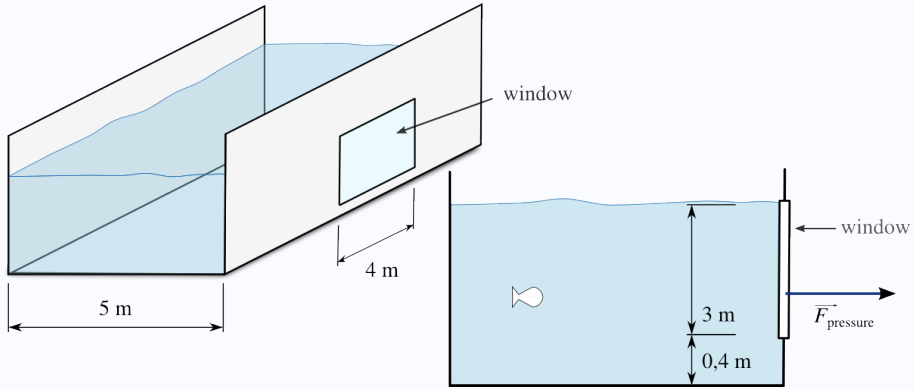

Figure 3.3: An aquarium tank with a window installed on one of its walls.
Figure CC-0 OC

3.9.1 What is the magnitude of the force exerted on the window by the water pressure?
3.9.2 At what height does this force act?

CC-BY-NC-SA Olivier Cleynen / Beyond Bernoulli Ventures, learnfluidmechanics.com

3.10

An open laboratory channel contains still water (figure 3.4). An observation window on one wall is hinged along its lower edge.

The hinge is 1,5 m below the water surface. The window is 0,9 m long and 2 m wide. The channel walls are inclined at an angle $\theta = 60\,^\circ$ to the horizontal.

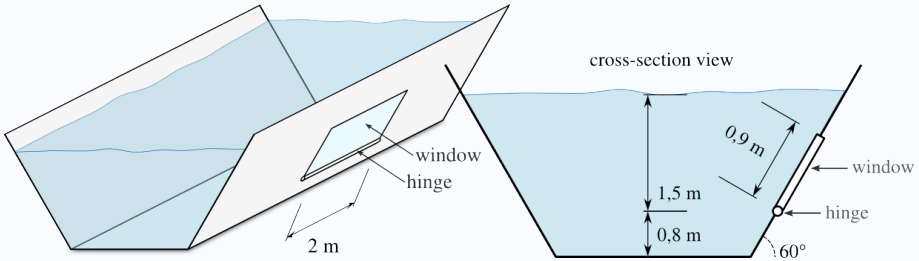

Figure 3.4: A hinged window in the wall of a channel containing still water.
Figure CC-0 OC

3.10.1 Sketch the pressure distribution on the water and air sides of the window.

3.10.2 What is the magnitude of the moment from water and air acting on opposing sides of the window, about the axis of the window hinge?

3.10.3 If the same window were positioned at the same depth, would decreasing the angle θ change the moment? Briefly justify your answer in 30 words or fewer.

3.11

The idealized flow around a cylinder in figure 3.5 provides a simple example for calculating pressure forces on a surface. The *potential flow* model neglects viscous effects and flow separation.

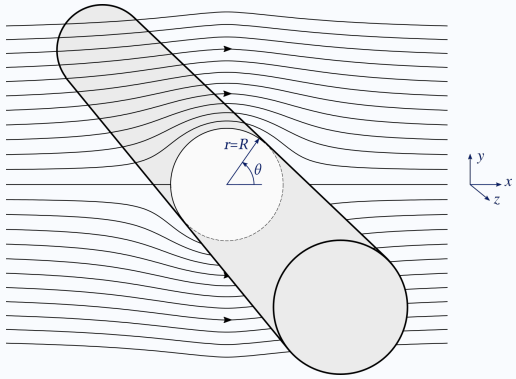

Figure 3.5: Idealized flow around a cylinder, as predicted by potential flow theory. The streamlines are represented only in a plane crossing the center of the cylinder, but they are identical all along the z direction.
Figure CC-BY-SA by Commons User:Kraaiennest & OC

The cylinder has diameter 10 cm, and it spans 50 cm across the flow (in the z direction). First consider still air, with $V = 0\ \mathrm{m\,s^{-1}}$ and $p_\infty = 1$ bar everywhere. Calculate the two pressure forces shown in figure 3.6.

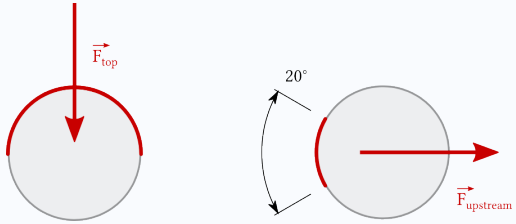

Figure 3.6: Left: vertical force on the top half of the cylinder. Right: horizontal force on the "nose" of the cylinder, on an area spanning 20 ° around the leading edge.
CC-0 OC

3.11.1 What is the magnitude of $\vec{F}_{top}$?

3.11.2 What is the magnitude of $\vec{F}_{upstream}$?
(a couple of hints to help with the algebra: $\int \sin x\ \mathrm{d}x = -\cos x + k$ and $\int \sin^3 x\ \mathrm{d}x = \frac{1}{3}\cos^3 x - \cos x + k$)

Now consider air with density $\rho_{atm.} = 1{,}225\ \mathrm{kg\,m^{-3}}$ flowing at $V_\infty = 50$ km/h. The pressure p_s on the cylinder surface varies with the angle θ according to

$$p_s = p_\infty + \frac{1}{2}\rho\left(V_\infty^2 - 4V_\infty^2 \sin^2\theta\right) \tag{3/41}$$

3.11.3 What is the new magnitude of $\vec{F}_{top}$?

3.11.4 What is the new magnitude of $\vec{F}_{upstream}$? (a couple of hints to help with the algebra: $\int \cos x\ \mathrm{d}x = \sin x + k$ and $\int \cos x \sin^2 x\ \mathrm{d}x = \frac{1}{3}\sin^3 x + k$)

3.12
A barge with a very simple geometry is moored in a water reservoir (figure 3.7).

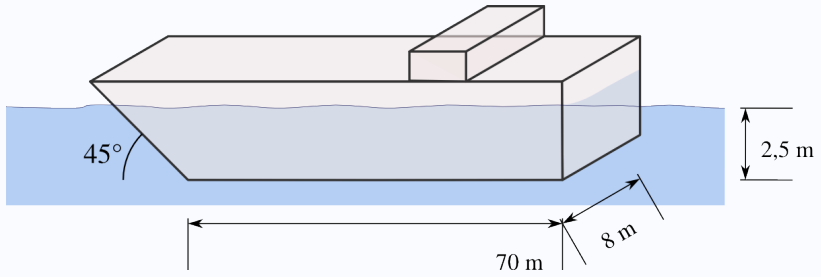

Figure 3.7: Basic layout of a barge floating in water.
Figure CC-0 OC

3.12.1 Sketch the pressure distribution on each immersed surface of the barge (left and right sides, rear, bottom and slanted front).
3.12.2 What is the magnitude of the pressure force on each surface?
3.12.3 What is the weight of the barge?

3.13
It's a beautiful day, and after the fluid dynamics lecture, you decide to fly around the city in your helicopter. As you climb, you feel the air pressure drop in your ears. The temperature is uniform at 12 °C, and the ground-level pressure is 101 kPa.

3.13.1 Let's model the air as an ideal gas (R_{air} = 287 J kg^{-1} K^{-1}) and set the coordinate z vertically downards. Starting from equation 3/10 expressing the pressure gradient in a static fluid, show that the ratio of the pressure at two points in the atmosphere, when the temperature is uniform, is:

$$\frac{p_2}{p_1} = \exp\left[\frac{g\Delta z}{RT_{cst.}}\right] \tag{3/42}$$

3.13.2 What is the ambient air pressure you will experience as you zoom by above the main street at a height of 75 m?
3.13.3 What would the pressure be at the same height on a day when the ambient temperature is 0 °C instead?
3.13.4 Express these results as differences compared to the ground-level pressure.

3.14
A company plans to build and operate a party boat with transparent windows in the hull walls and floor. They are concerned that the windows may be too weak to withstand the water pressure when all the guests gather on one side, causing the boat to list (lean sideways) at an angle α. They send you the boat dimensions and ask for a short, precise assessment.

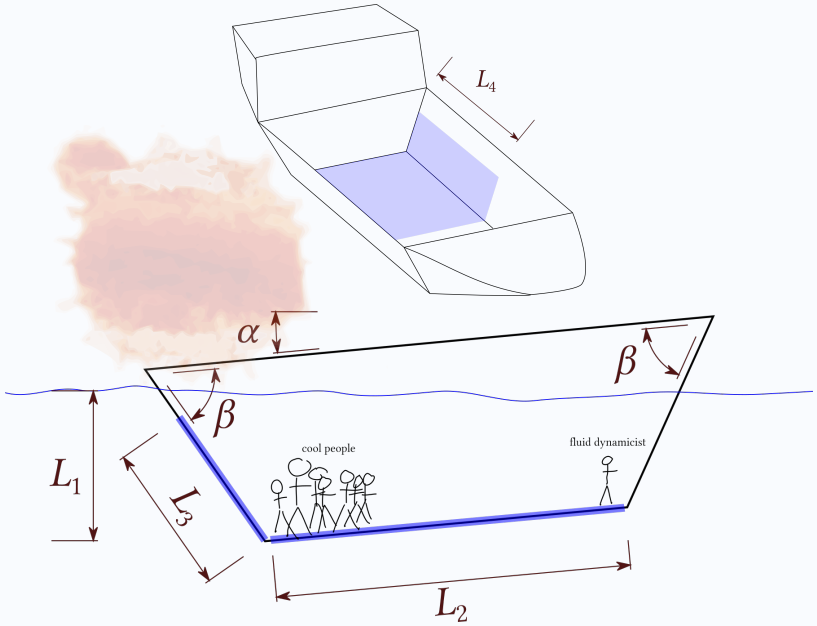

Figure 3.8: Layout and cross-section of the planned party boat.
From the 2020 assignment by Olivier Cleynen, Germán Santa-Maria, and Jochen König.

The reinforced glass floor window in figure 3.8 measures L_2 = 8 m wide by L_4 = 18 m long. The side window also has length L_4 and measures L_3 = 2,5 m along the hull wall. The lower edge shared by the windows is the deepest point of the hull, at a depth of L_1 = 3 m below the water surface. The hull sides make an angle β = 70 ° with the ceiling. The customer expects the list angle α to reach 5 °.

3.14.1 What net force does pressure exert on the floor window?
3.14.2 Where on the window does this force act?

CC-BY-NC-SA Olivier Cleynen / Beyond Bernoulli Ventures, learnfluidmechanics.com

3.15 Optional: at the top of the tower

The integration we carried out in Problem 3.13 to model the pressure distribution in the atmosphere worked because we had assumed that the temperature was uniform and constant ($T = T_{cst.}$). In practice, this is hardly the case.

3.15.1 Starting from equation 3/10 for the pressure gradient in a static fluid, derive an expression for atmospheric pressure when the temperature decreases with altitude at a constant rate (e.g. $-7\,\mathrm{K\,km^{-1}}$).

A successful fluid dynamics lecturer purchases an apartment at the top of the Burj Khalifa tower (800 m above the ground). Inside the tower, the temperature is controlled everywhere at 18,5 °C. Outside, the ground temperature is 30 °C and it decreases linearly with altitude (gradient: $-7\,\mathrm{K\,km^{-1}}$).

A door is opened at the bottom of the tower, so that at zero altitude the air pressure (1 bar) is identical inside and outside of the tower.

For the purpose of the exercise, we pretend the tower is entirely hermetic (meaning air is prevented from flowing in or out of its windows).

3.15.2 What is the pressure difference across the apartment windows at the top of the tower?

3.16 Optional: do it with AI: Pressure distributions

Using Problem 3.13, plot pressure as a function of height up to 300 m for the two ground temperatures.

3.17 Optional: do it with AI: More pressure distributions

Using Problem 3.15, plot pressure as a function of height over the full height of the tower for both the given temperature gradient and a uniform temperature.

3.18 Optional: do it with AI: wall pressure force in a realistic case

Download the flow case at https://learnfluidmechanics.com/periodic-hills-29_student_export.zip and explore the data. This is a high-quality simulation of water flow in a duct ("Flow over periodic hills" published by Laizet and Zhou, from [8, 11]), which we have explored in chapter 3.

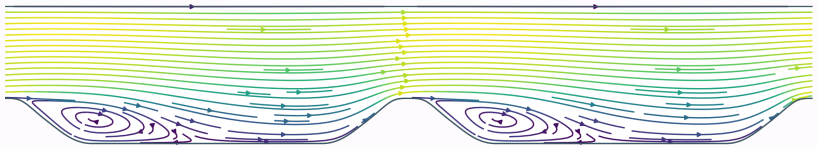

Figure 3.9: one hill in an infinitely-long obstacle course
Data published by Laizet and Zhou, from [8, 11]

- plot pressure as a function of distance along the bottom wall, on an x-y diagram including the hill
- plot pressure as a color on a thick line that represents the geometry of the bottom wall with the hill
- plot the pressure traction on the surface of the hill as a series of vectors originating from the wall
- separate the center hill in three parts, and represent the force exerted by the fluid pressure as a single vector on each of the three segments
- plot these vectors again after you subtract pressure exerted on the other side of the hill, which we will assume to be the average pressure on the top wall. Which part of the hill is pulled out or pushed in?

Feel free to run basic checks on the simulation results, like any wise scientist or engineer would: with suspicion and curiosity. Are there flaws in this data? Is the mass flow the same everywhere? What is the net force on the fluid?

CC-BY-NC-SA Olivier Cleynen / Beyond Bernoulli Ventures, learnfluidmechanics.com

Answers

3.2.1 1,55 bar, see equation 3/12
3.3.1 Four columns, see section 3.3
3.4.1 Six columns, see section 3.3
3.5.1 Answers 2, 3, 6 and 9. The author can neither confirm nor refute the claim about impressing friends.
3.6.1 Approximately 0,99 bar, see equation 3/14
3.7.1 $p_A = p_{atm.} + 0{,}039\ \text{bar} \approx 1{,}039\ \text{bar}$.
3.8.1 $p_{inside} = p_{atm.} + 0{,}0157\ \text{bar} \approx 1{,}0157\ \text{bar}$;
3.8.2 $\Delta z_2 = 1{,}1765\ \text{cm}$. Is having both of those results right enough to call yourself a U-tuber?
3.9.1 $F_{net} = \rho g L\left(Z_{max} L_{max} - \frac{1}{2} L_{max}^2\right) = 176{,}6\ \text{kN}$;
3.9.2 $M_{net,\ bottom\ hinge} = \rho g L\left(\frac{1}{2} Z_{max} L_{max}^2 - \frac{1}{3} L_{max}^3\right) = 176{,}6\ \text{kN m}$, so the force acts at $R = \frac{M_{net}}{F_{net}} = 1\ \text{m}$ above the bottom hinge.
3.10.2 $M_{net} = 7{,}79\ \text{kN m}$; observe the equation used to calculate M_{net} to answer this question. If needed, ask for help in class!
3.11.1 $F_{top} = \int_{\theta=0}^{\theta=\pi} RLp_s \sin\theta\ \mathrm{d}\theta = -5000\ \text{N}$ (downwards on top half);
3.11.2 $F_{front} = +868\ \text{N}$ (on nose patch in downstream direction);
3.11.3 $F_{top} = -4990\ \text{N}$ downwards (a lift force of 10 N);
3.11.4 $F_{front} = +869\ \text{N}$ (1 N of drag!).
3.12.2 $F_{rear} = 0{,}2453\ \text{MN}$, $F_{side} = 2{,}1714\ \text{MN}$ each, $F_{bottom} = 13{,}734\ \text{MN}$, $F_{front} = 0{,}3468\ \text{MN}$;
3.12.3 $F_{buoyancy} = 13{,}979\ \text{MN}$ (1425 t).
3.13.1 see the lead to equation 3/15
3.13.2 $p_2 = 100{,}096\ \text{kPa}$
3.13.3 $p_{2b} = 100{,}057\ \text{kPa}$
3.13.4 904 and 943 Pa respectively
3.14.1 $F_{net} \approx 3{,}75\ \text{MN}$
3.14.2 The moment about the deeper edge is $M_{net} = \int_0^{L_2} r p_{net} L_4\ \mathrm{d}r = \rho g L_4\left(\frac{1}{2} L_1 L_2^2 - \frac{1}{3} L_2^3 \sin\alpha\right) \approx 14{,}33\ \text{MN m}$.
The force acts at $R_{force} = \frac{M_{net}}{F_{net}} \approx 3{,}82\ \text{m}$ from the deeper edge and 9 m along the boat.
3.15.1 $\frac{p_2}{p_1} = \left(1 + \frac{k z_2}{T_1}\right)^{\frac{g}{kR}}$
3.15.2 $\Delta p = +247{,}4\ \text{Pa}$ inwards.

CC-BY-NC-SA Olivier Cleynen / Beyond Bernoulli Ventures, learnfluidmechanics.com